BE40 Multifunctional LED Panel Beacon

UL/cUL TYPE 4X (3R WITH BUZZER)
E362598
IND.CONT.EQ.

INSTALLATION

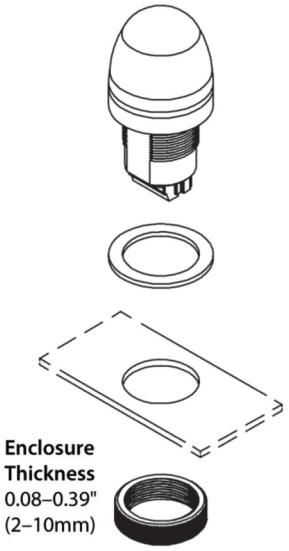

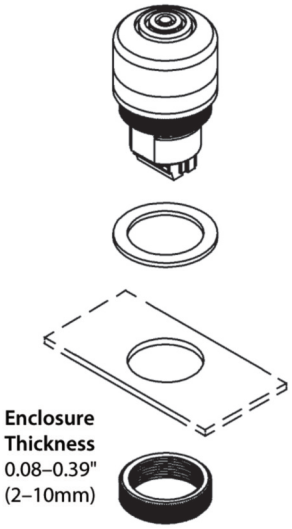

Locking Ring:

- For use on flat surfaces only of a Type 1,3,3R,4,4X (Buzzer Models Type 1,3,3R) Enclosure
- Lock ring torque: 17.7 lb-in or equivalent

Wiring Specifications:

- 14 - 30 AWG Solid/Stranded or equivalent
- Terminal screw torque: 6 lb-in or equivalent

ELECTRICAL WIRING

ATTENTION: Applied voltage must match voltage specifications of connected signal module(s).

BE40-LEDFL (LED Beacon)

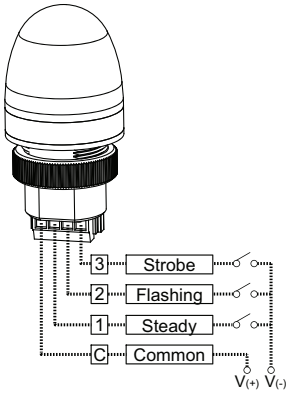

BE40-xxx-RGA (RGA LED Beacon)

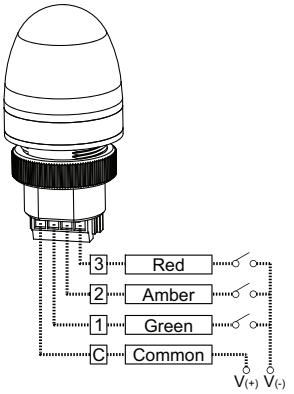

C+2 has priority over C+1

C+3 has priority over C+2 and C+1

BE40-BZ-2 (2-tone Buzzer)

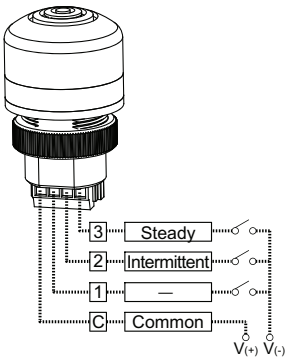

BE40-BZ-LEDFL (LED Beacon & Buzzer)

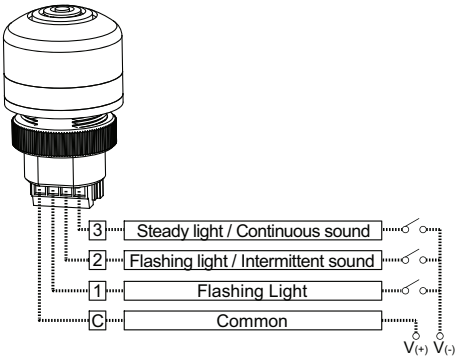

C+2 has priority over C+1

C+3 has priority over C+2 and C+1

BE40-LED (LED Beacon)

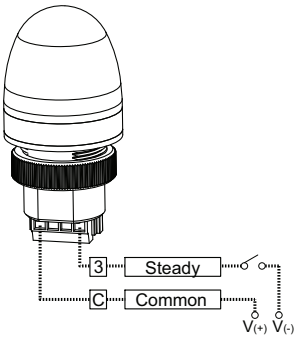

BE40-BZ-1 (1-tone Buzzer)

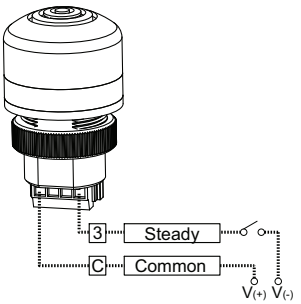

SPECIFICATIONS

INSTALLATION MUST BE MADE BY TRAINED PERSONNEL
USE APPROPRIATE TIME-LAG FUSES ACCORDING TO THE VOLTAGE ON THE POWER SUPPLY LINE

Input Voltage

MODEL	INPUT VOLTAGE	MAXIMUM AMBIENT TEMPERATURE ALLOWED
LED	12-240VAC/DC	140°F (60°C)
LED w/ Buzzer	12-240VAC/DC	140°F (60°C)
Buzzer	12-240VAC/DC	140°F (60°C)

For Devices Rated 12-24VAC/VDC only:

- Power supply shall be connected to a "Class 2" or "Limited Voltage Limited Current (LVLC)" source only.

Current Consumption

BE40-LED (LED Beacon, Steady)

VDC	12	24	-	-	-	-
VAC	-	-	12	24	48	240
mA	21	24	30	46	9	40

BE40-LEDFL (LED Beacon, Flashing)

VDC	12	24	-	-		
VAC	-	-	12	24	48	240
mA	62	43	125	129	36	15

BE40-BZ-1 (1-tone Buzzer)

VDC	12	24	-	-	-	-
VAC	-	-	12	24	48	240
mA	5	8	16	22	6	20
db(A)1m	70					

BE40-xxx-RGA (LED Beacon, Steady & Flashing)

VDC	12	24	-	-	-	-
VAC	-	-	12	24	48	240
mA	33	29	107	110	39	17

BE40-BZ-LEDFL (LED, Flashing w/Integrated Buzzer)

VDC	12	24	-	-	-	-
VAC	-	-	12	24	48	240
mA	15	23	83	108	36	13
db(A)1m	85					

BE40-BZ-2 (2-tone Buzzer)

VDC	12	24	-	-	-	-
VAC	-	-	12	24	48	240
mA	10	14	47	76	14	9
db(A)1m	85					

DIMENSIONS

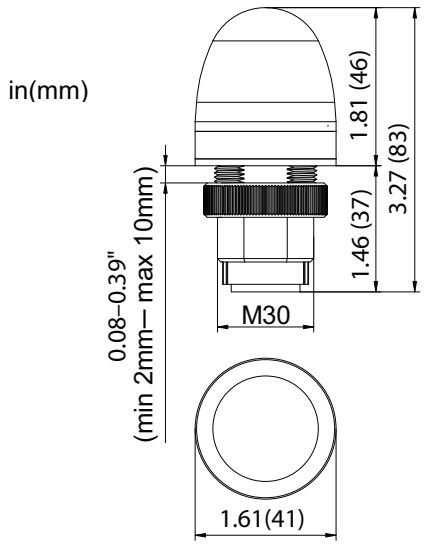

LED, Steady & Flashing

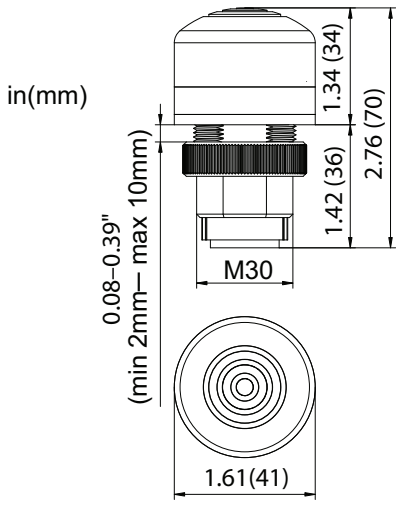

Buzzer & LED w/ Buzzer